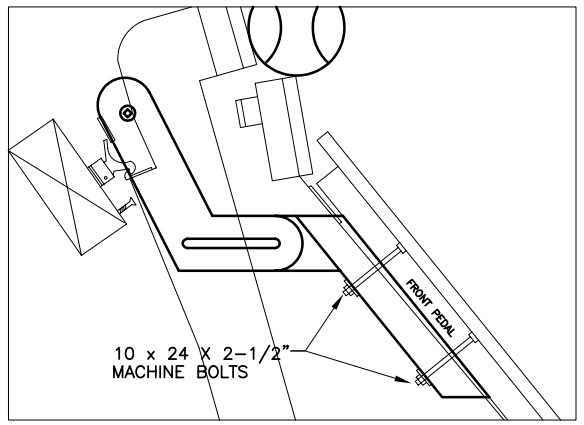

DE-LATCH ARM MOUNTING DETAIL
NOT TO SCALE

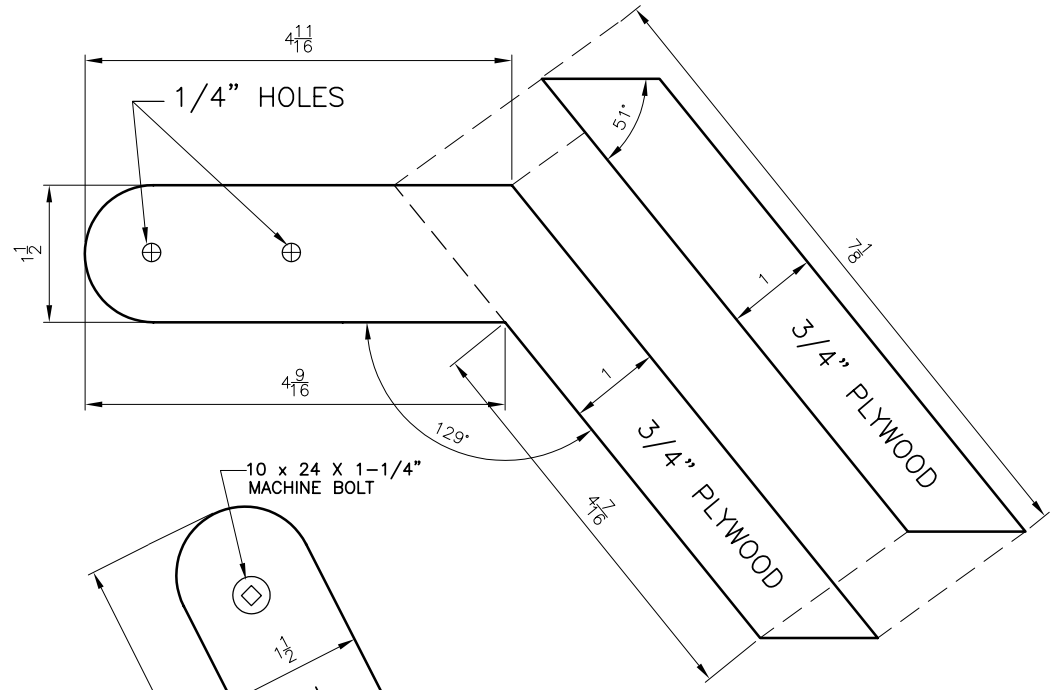

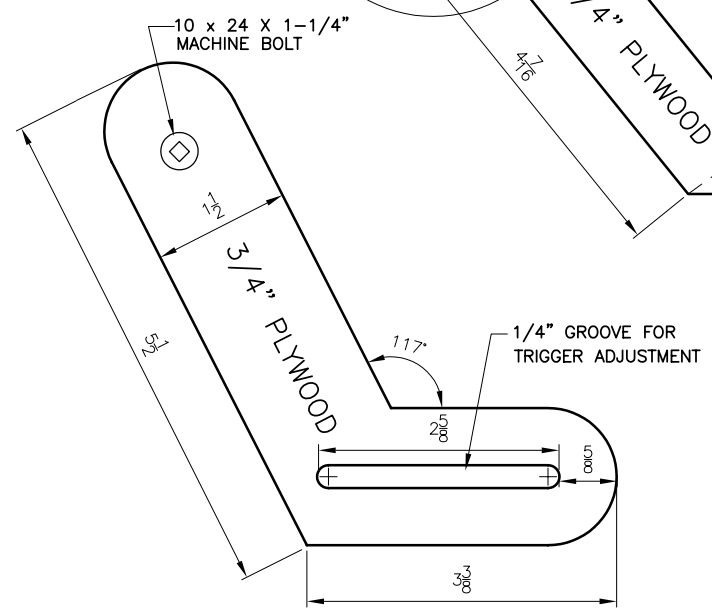

DE-LATCH ARM DETAIL
FULL SCALE 1"=1"

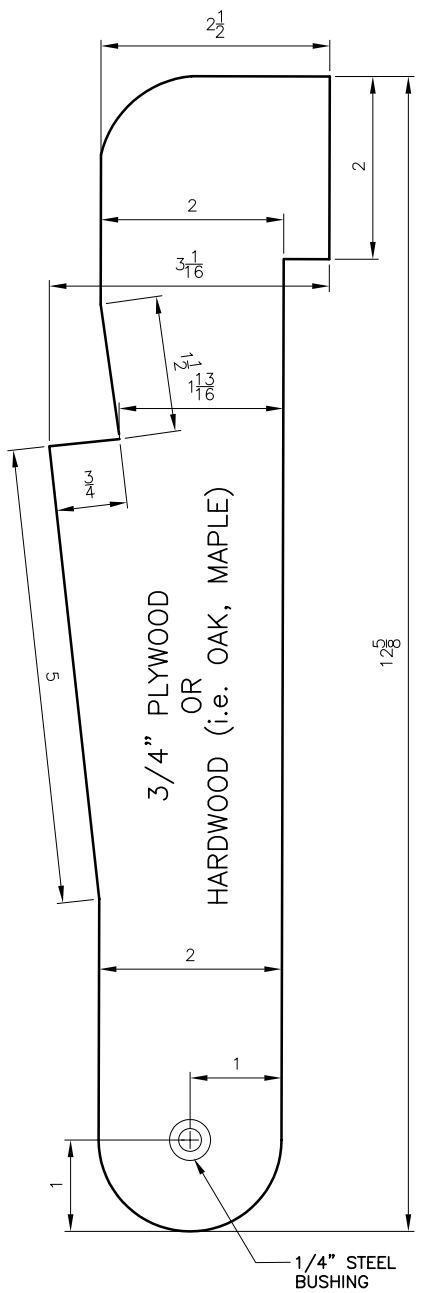

BALL HAMMER DETAIL
FULL SCALE 1"=1"

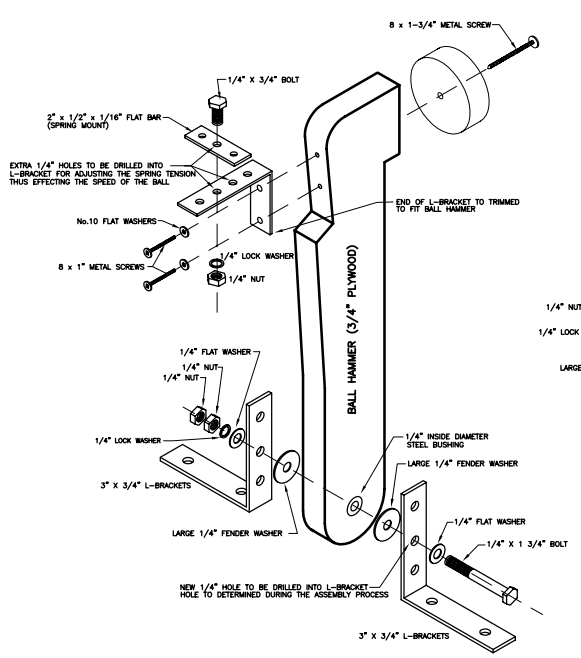

BALL HAMMER ASSEMBALLY DETAIL
HALF SCALE (1/2"=1")

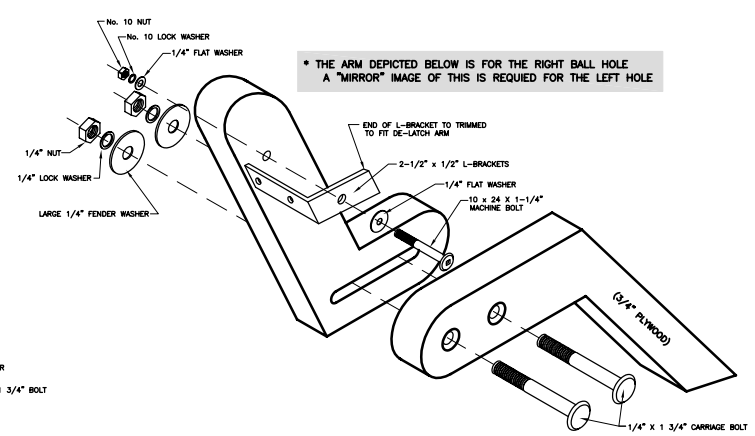

DE-LATCH ARM ASSEMBLY DETAIL
HALF SCALE (1/2"=1")

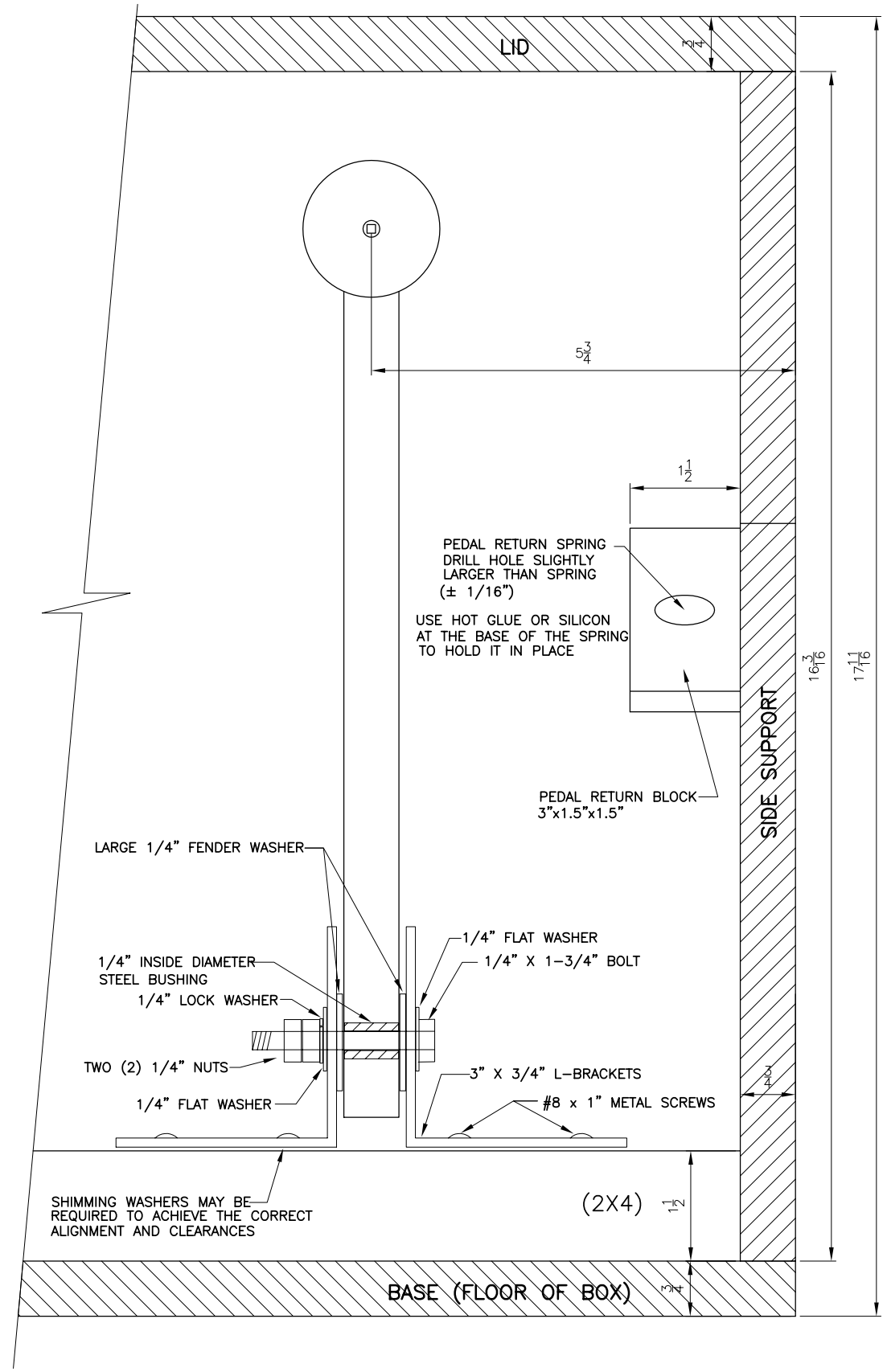

FRONT CROSS SECTION
FULL SCALE 1"=1"

The Willoughby Workshop
www.flyballequip.com

REV. No.	REVISION DESCRIPTION	BY	DATE

DISCLAIMER

This drawing / design is the property of: The Willoughby Workshop and may not be reproduced by any means without permission.

Slight variances may be required during the construction process.

Builders shall verify all dimensions at time of construction due to the variations of one's tools, skills and woodworking abilities.

Please report any discrepancies that are found on this drawing.

DESIGN BY: M. FREDA
DRAWN BY: M. FREDA
DATE: 2004.03.10
SCALE: AS SHOWN

TITLE: BASIC 2 HOLE FLYBALL BOX PLANS

DRAWING NAME: SHEET 2 CROSS SECTION AND ASSEMBLY DETAILS
FILE NAME: 2HOLESH2.DWG

SHEET	REVISION
2 OF 2	0